DATASHEET

AXIS Q60-E PTZ Dome Network Cameras

Outdoor, high-speed PTZ domes: AXIS Q6042-E/Q6044-E/Q6045-E

- Up to HDTV 1080p
- Up to 36x optical zoom
- Outdoor-ready and Arctic Temperature Control
- Vandal-resistant and shock detection
- Automatic defog (AXIS Q6044-E)
- High PoE

AXIS Q60-E cameras are top-of-the-line, outdoor-ready pan/tilt/zoom (PTZ) domes that provide exceptional coverage of wide areas and great detail when zooming in. Designed for easy installation and reliable operation outdoors, they are ideal for city surveillance and airports, train stations, harbors and stadiums.

AXIS Q6045-E offers a rich viewing experience with HDTV 1080p and 20x optical zoom. AXIS Q6044-E provides HDTV 720p and 30x optical zoom. AXIS Q6042-E supports full frame rate Extended D1 resolution and 36x optical zoom.

AXIS Q60-E cameras are vandal-resistant (IK10) and have shock detection, surge protection (railway standards), and protection against dust, rain and snow (IP66 and NEMA 4X). They can operate in temperatures ranging from -50 °C to 50 °C (-58 °F to 122 °F). The cameras' Arctic Temperature Control ensures safe start-up in extreme cold. AXIS Q6042-E and AXIS Q6044-E support electronic image stabilization—useful for getting smoother video in windy conditions. In fog, AXIS Q6044-E can provide clearer video with its automatic defog functionality.

The PTZ domes support autotracking and Active Gatekeeper, and have substantial capacity for third-party intelligent video applications. AXIS Q6045-E offers additional built-in analytics such as highlight compensation, object removed and enter/exit detection.

AXIS Q60-E cameras have a built-in memory card slot for local storage of recordings. The cameras are powered by High Power over Ethernet using the supplied High PoE midspan.

Note: Mounting brackets are sold separately.

High-performance outdoor-ready PTZ domes

The robust AXIS Q60-E PTZ domes are designed for round-the-clock pan/tilt/zoom operation in outdoor environments. The cameras can be automatically directed to 256 preset positions using guard tour. With endless 360° pan, they enable surveillance of an extremely wide area. High zoom, in combination with high resolution, enables detailed surveillance at great distances. AXIS Q60-E cameras have fast and precise pan/tilt performance. They can also tilt 20° above the horizon, which makes it possible for the cameras to see higher than their mounting position. This can be useful, for example, at a stadium where there is a need to look up at the stands.

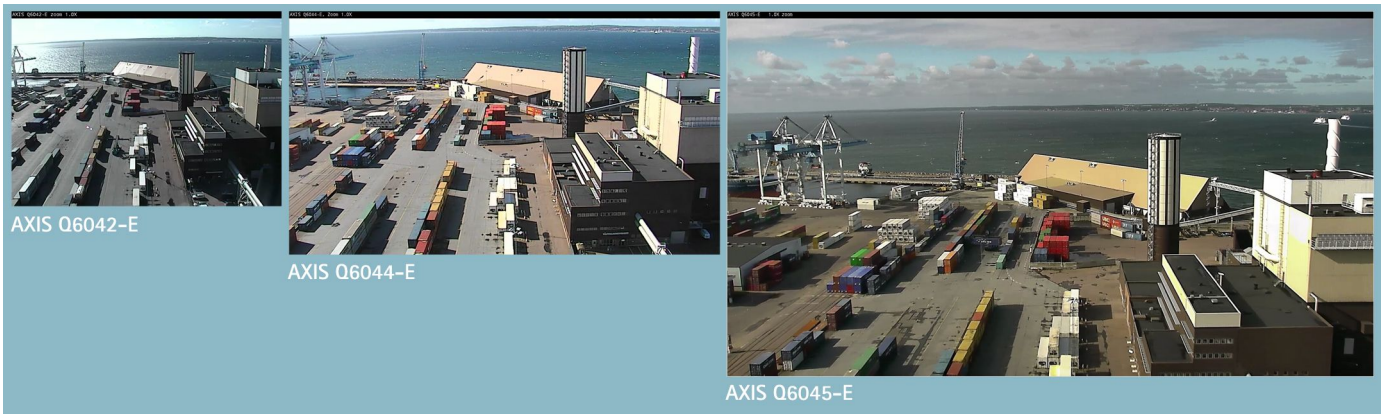

The images above show the field of view and level of detail provided by the three AXIS Q60-E PTZ domes.

Snapshots of HDTV 1080p views from AXIS Q6045-E: at left, wide view; at right, 20x zoomed-in view where the license plate of a car 275 m (900 ft.) away can be read.

Great detail with HDTV

Among the three cameras, AXIS Q6045-E provides the widest field of view—with a 62.98° horizontal angle of view. In addition, AXIS Q6045-E offers the highest level of detail as it delivers HDTV 1080p performance in compliance with the SMPTE 274M standard regarding a 1920x1080 pixel resolution, full frame rate at 25/30 frames per second, HDTV color fidelity and a 16:9 format.

HDTV 1080p provides more than double the number of pixels as HDTV 720p (1280x740p). While AXIS Q6045-E has 20x optical zoom, the combination of the zoom factor and HDTV 1080p allows the license plate of a vehicle to be read some 275 m (900 ft) away—at a further distance than with AXIS Q6044-E, which has 30x optical zoom, and AXIS Q6042-E, which has 36x optical zoom.

AXIS Q6044-E also offers a wide horizontal viewing angle at 62.9°. The camera's 30x optical zoom, in combination with HDTV 720p, provides superb zoomed-in views, enabling, for instance, the license plate of a vehicle to be read up to 245 m (800 ft) away. AXIS Q6042-E offers Extended D1 resolution (736x576 in 50 Hz, 752x480 in 60 Hz) and can enable a vehicle's license plate to be read some 190 m (620 ft) away.

All three PTZ domes support H.264 Main Profile for efficient compression of video that maintains image quality while at the same time minimizing bandwidth use and storage space. The cameras offer day/night functionality, enabling excellent color video during day time, and clear black and white video in low light.

Electronic image stabilization in AXIS Q6042-E and AXIS Q6044-E

Cameras with high zoom are sensitive to vibrations from wind and traffic. AXIS Q6042-E and AXIS Q6044-E support electronic image stabilization (EIS), which reduces the effects of camera vibration. In windy conditions, EIS provides clearer, more useful video and helps reduce the size of video files, which leads to lower bandwidth and storage use.

Under vibrating conditions: at left, image without EIS; at right, a snapshot from a vibrating AXIS Q6044-E with EIS activated.

Automatic defog with AXIS Q6044-E

AXIS Q6044-E supports automatic defog, which when activated, automatically detects fog in the scene and digitally filters it out of view to provide clearer video.

Images from AXIS Q6044-E: at left, without automatic defog; at right, with automatic defog activated.

Dimensions

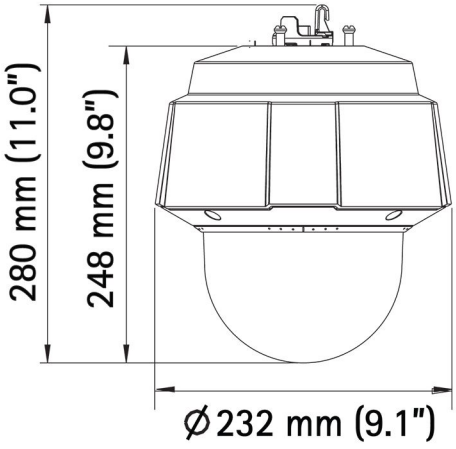

Optional accessories

1. *AXIS T91A*
2. *Smoked Dome D*
3. *Axis High PoE midspans*
4. *AXIS T8129 PoE Extender*
5. *AXIS P8221*
6. *AXIS T8310*
7. *RJ45 IP66-rated cables with premounted connector (CAT6)*

Technical Specifications – AXIS Q60-E PTZ Dome Network Cameras

Models	**AXIS Q6042-E** 50 Hz, **AXIS Q6042-E** 60 Hz **AXIS Q6044-E** 50 Hz, **AXIS Q6044-E** 60 Hz **AXIS Q6045-E** 50 Hz, **AXIS Q6045-E** 60 Hz
Camera	
Image sensor	**AXIS Q6042-E**: 1/4" ExView HAD progressive scan CCD **AXIS Q6044-E**: 1/3" progressive scan CCD **AXIS Q6045-E**: 1/3" progressive scan CMOS
Lens	**AXIS Q6042-E**: f=3.3–119 mm, F1.4–4.2, autofocus Horizontal angle of view: 57.2° – 1.7° **AXIS Q6044-E**: f=4.4–132 mm, F1.4–4.6, autofocus Horizontal angle of view: 62.9° – 2.2° **AXIS Q6045-E**: f=4.45–89 mm, F1.6–2.9, autofocus Horizontal angle of view: 62.98°–3.49°
Day and night	Automatically removable infrared-cut filter
Minimum illumination	**AXIS Q6042-E**: Color: 0.5 lux at 30 IRE F1.4, B/W: 0.008 lux at 30 IRE F1.4 **AXIS Q6044-E**: Color: 0.2 lux at 30 IRE F1.4, B/W: 0.04 lux at 30 IRE F1.4 **AXIS Q6045-E**: Color: 0.6 lux at 30 IRE F1.6, B/W: 0.04 lux at 30 IRE F1.6
Shutter time	**AXIS Q6042-E**: 1/30000 s to 1.5 s (50 Hz), 1/30000 s to 0.5 s (60 Hz) **AXIS Q6044-E**: 1/10000 s to 1/4 s **AXIS Q6045-E**: 1/33000 s to 1/3 s (50 Hz), 1/33000 s to 1/4 s (60 Hz)
Pan/Tilt/Zoom	E-flip, 256 preset positions, Tour recording, Guard tour, Control queue, On-screen directional indicator Pan: 360° endless, 0.05°–450°/s; Tilt: 220°, 0.05°–450°/s **AXIS Q6042-E**: 36x optical zoom and 12x digital zoom, total 432x zoom **AXIS Q6044-E**: 30x optical zoom and 12x digital zoom, total 360x zoom **AXIS Q6045-E**: 20x optical zoom and 12x digital zoom, total 240x zoom
Video	
Video compression	H.264 Main and Baseline Profiles (MPEG-4 Part 10/AVC) Motion JPEG
Resolutions	**AXIS Q6042-E**: Extended D1 736x576 to 176x144 (50 Hz), Extended D1 752x480 to 176x120 (60 Hz) **AXIS Q6044-E**: 1280x720 (HDTV 720p) to 320x180 **AXIS Q6045-E**: 1920x1080 (HDTV 1080p) to 320x180
Frame rate	H.264: Up to 25/30 fps (50/60 Hz) in all resolutions Motion JPEG: Up to 25/30 fps (50/60 Hz) in all resolutions
Video streaming	Multiple, individually configurable streams in H.264 and Motion JPEG Controllable frame rate and bandwidth VBR/CBR H.264
Image settings	Wide dynamic range (WDR), Manual shutter time, Compression, Color, Brightness, Sharpness, White balance, Exposure control, Exposure zones, Backlight compensation, Fine tuning of behavior at low light, Rotation, Text and image overlay, 32 individual 3D privacy masks, Image freeze on PTZ **AXIS Q6042-E**: Electronic image stabilization **AXIS Q6044-E**: Electronic image stabilization, Automatic defog **AXIS Q6045-E**: Highlight compensation
Network	
Security	Password protection, IP address filtering, HTTPS[a] encryption, IEEE 802.1X[a] network access control, Digest authentication, User access log
Supported protocols	IPv4/v6, HTTP, HTTPS[a], SSL/TLS[a], QoS Layer 3 DiffServ, FTP, CIFS/SMB, SMTP, Bonjour, UPnP™, SNMPv1/v2c/v3 (MIB-II), DNS, DynDNS, NTP, RTSP, RTP, TCP, UDP, IGMP, RTCP, ICMP, DHCP, ARP, SOCKS, SSH, NTCIP
System integration	
Application Programming Interface	Open API for software integration, including VAPIX® and AXIS Camera Application Platform; specifications at *www.axis.com* AXIS Video Hosting System (AVHS) with One-Click Camera Connection. ONVIF Profile S, specification at *www.onvif.org*
Intelligent video	Video motion detection, Autotracking, Active Gatekeeper, AXIS Camera Application Platform enabling installation of additional applications **AXIS Q6044-E**: Automatic defog **AXIS Q6045-E**: Basic analytics (not to be compared with third-party analytics): Object removed, Enter/exit detector, Fence detector, Object counter, Highlight compensation
Event triggers	Video motion detection, Shock detection, Fan, Heater, Temperature, Manual trigger, Autotracking, Moving, PTZ preset, Edge storage events, AXIS Camera Application Platform **AXIS Q6045-E**: Enter/exit, Fence detector, Object removed
Event actions	File upload: FTP, HTTP, network share and email Notification: email, HTTP and TCP PTZ preset, Guard tour, Autotracking, Day/night mode, Video recording to edge storage, Pre- and post-alarm video buffering
Built-in installation aids	Pixel counter
General	
Casing	IP66-, NEMA 4X- and IK10-rated metal casing (aluminum), polycarbonate (PC) clear dome, sunshield (PC/ASA)
Memory	512 MB RAM, 128 MB Flash
Power	High Power over Ethernet (High PoE), max. 60 W AXIS T8124 High PoE 60 W Midspan 1-port: 100–240 V AC, max. 74 W
Connectors	RJ45 for 10BASE-T/100BASE-TX PoE RJ45 Push-pull Connector (IP66) included
Edge storage	SD/SDHC/SDXC slot supporting memory card up to 64 GB (card not included); support for recording to network share (network-attached storage or file server)
Operating conditions	-50 °C to 50 °C (-58 °F to 122 °F) Arctic Temperature Control enables camera start-up at temperatures as low as -50 °C (-58 °F) Humidity 10–100% RH (condensing)
Storage conditions	-50 °C to 50 °C (-58 °F to 122 °F)
Approvals	EN 55022 Class A, EN 61000-3-2, EN 61000-3-3, EN 61000-6-1, EN 61000-6-2, EN 55024, EN 50121-4, IEC 62236-4, FCC Part 15 Subpart B Class A, ICES-003 Class A, VCCI Class A, C-tick AS/NZS CISPR 22 Class A, KCC KN22 Class A, KN24, IEC/EN/UL 60950-1, IEC/EN/UL 60950-22, IEC/EN 60529 IP66, NEMA 250 Type 4X, NEMA TS-2-2003 v 02.06, subsection 2.2.7, 2.2.8, 2.2.9; IEC 62262 IK10, IEC 60068-2-1, IEC 60068-2-2, IEC 60068-2-78, IEC 60068-2-14, IEC 60068-2-30, IEC 60068-2-6, IEC 60068-2-27, IEC 60068-2-60, ISO 4892-2 Midspan: EN 60950-1, GS, UL, cUL, CE, FCC, VCCI, CB, KCC, UL-AR
Weight	3.7 kg (8.2 lb.)
Included accessories	AXIS T8124 High PoE 60 W Midspan 1-port, RJ45 Push-pull Connector (IP66), Sunshield, Installation Guide, Installation and Management Software CD, Windows decoder 1-user license
Video management software	AXIS Camera Companion (included), AXIS Camera Station and video management software from Axis' Application Development Partners (not included). For more information, see *www.axis.com/products/video/software*
Warranty	Axis 3-year warranty and AXIS Extended Warranty option, see *www.axis.com/warranty*

a. *This product includes software developed by the OpenSSL Project for use in the OpenSSL Toolkit. (www.openssl.org), and cryptographic software written by Eric Young (eay@cryptsoft.com).*

More information is available at www.axis.com

©2014 Axis Communications AB. AXIS COMMUNICATIONS, AXIS, ETRAX, ARTPEC and VAPIX are registered trademarks or trademark applications of Axis AB in various jurisdictions. All other company names and products are trademarks or registered trademarks of their respective companies. We reserve the right to introduce modifications without notice.

56114/EN/M3.2/022014